SOCKET WELD BALL VALVE

CARBON STEEL

Product Group Code : **GK 1450**

Pressure Class : **PN 40**

PRODUCT FEATURES	FULL BORE	3 PIECE	ISO 5211 ACTUATOR MOUNTING

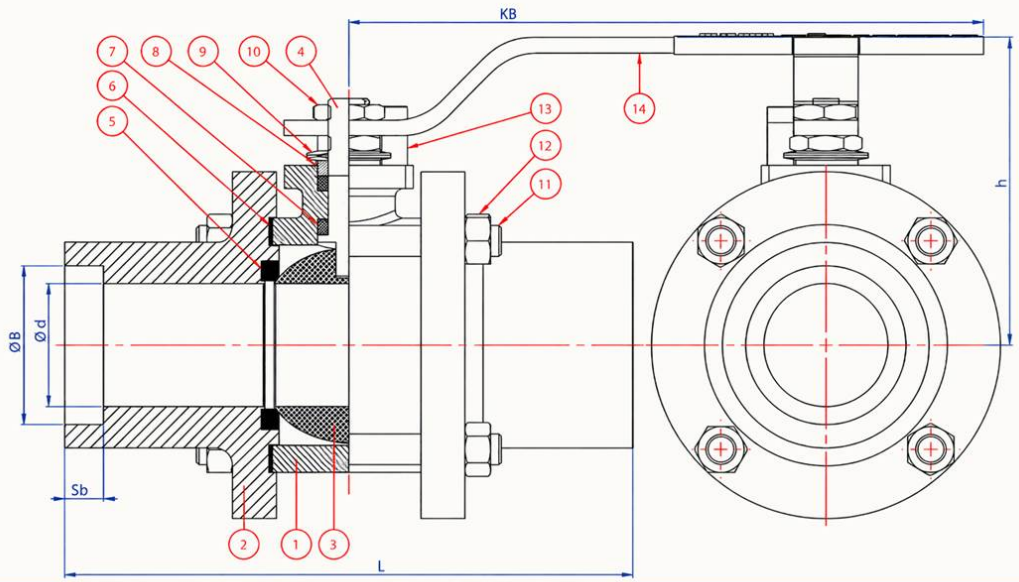

PARTS / MATERIALS

NO	PART NAME	MATERIAL
1	BODY	CARBON STEEL
2	COVER	CARBON STEEL
3	BALL	AISI 420
4	STEM	CK 45 + GAL.
5	BALL SEAL	PTFE-Teflon
6	BODY SEAL	PTFE-Teflon
7	NECK SEAL	PTFE-Teflon
8	PRESSURE RING	St 42
9	BOWL WASHER	Ck 70
10	COUNTER NUT	5.6.
11	STUD BOLT	8.8
12	NUT	8.8
13	STOP PIN	St 42
14	HANDLE	St 37

ACTUATOR DRAWING - ISO 5211

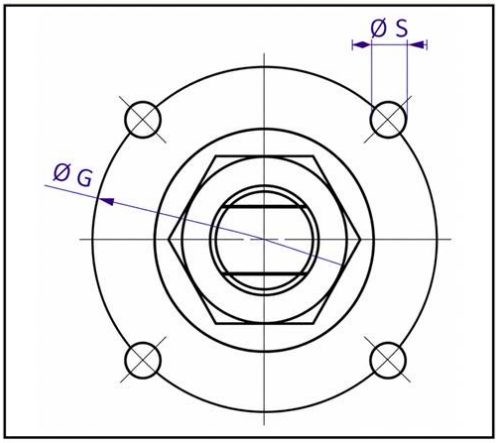

PRODUCT



DIMENSIONS

DN	INCH	L mm	KB mm	h mm	B mm	d mm	Sb mm	G mm	S	WEIGHT kg
DN 15	1/2"	108	150	80	21,8	15	10	36	M 5	
DN 20	3/4"	117	150	85	27,4	20	13	36	M 5	
DN 25	1"	127	185	90	34,1	25	13	42	M 5	
DN 32	1 1/4"	140	240	100	42,8	32	13	42	M 5	
DN 40	1 1/2"	165	280	120	48,8	40	16	50	M 6	
DN 50	2"	178	280	125	60,8	50	16	50	M 6	
DN 65	2 1/2"	190	330	150	76,7	65	16	70	M 8	
DN 80	3"	203	400	160	89,5	80	16	70	M 8	
DN 100	4"	305	460	175	115	100	20	102	M 10	

DESIGN	FACE-TO-FACE	BAĞLANTI / CONNECTION	TEST	OPERATING TEMPERATURE
EN 1983	EN 12982	EN ISO 9692-1	EN 12266-1	-29 °C / +180 °C

APPLICATIONS

WATER · HOT WATER · COMPRESSED AIR · FUEL-OIL · INDUSTRIAL APPLICATIONS

CERTIFICATES

CE 0408 · EAC · ISO 9001 · ISO 14001 · ISO 45001 · ISO 10002

Dimensions are in mm. Within the relevant standards; we reserve the right to change the design and construction.

www.govdesan.com | info@govdesan.com